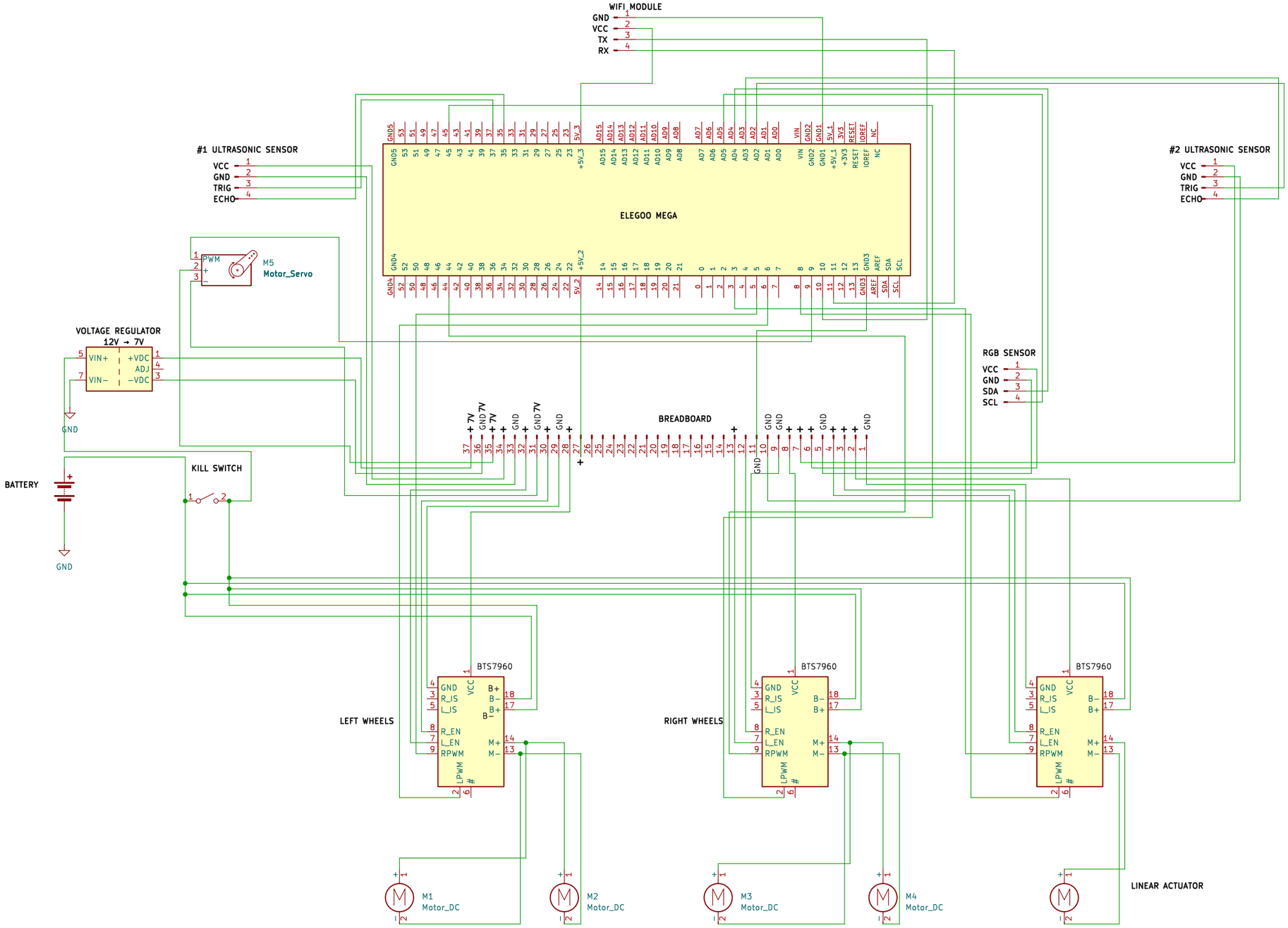

Anggie Espinoza
University of Maryland
Sheet: /
File: updated otv schematic.kicad_sch

Title: OTV Electrical Schematic

Size: A3	Date: 5/9/2026	**Rev: 1.0**
KiCad E.D.A. 9.0.7		Id: 1/1